C.I.P.	30 Super Fl. H&H Country of Origin: GB	TAB.	II
		Date	84-06-14
		Revision	11-05-25

Alternative Names: 300 Fl. N.E.

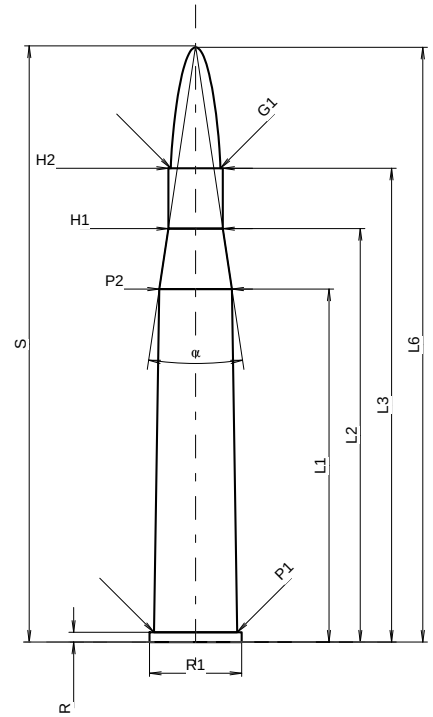

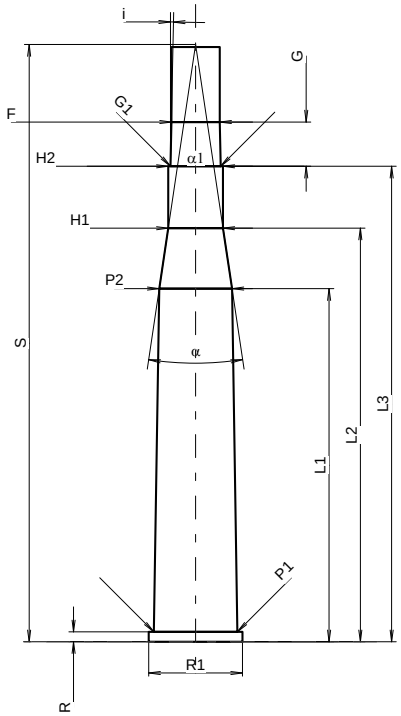

Scale 1:1.19

CARTRIDGE MAXI

Lengths

L1 *	=	55.63	
L2 *	=	65.15	
L3 1)	=	74.68	
L4	=		
L5	=		
L6	=	93.73	

Case Head

R 1)	=	1.52	-0.25
R1	=	14.53	
R3	=		
E	=		
E1	=		
e min	=		
δ	=		
f	=		
β	=		

Powder Chamber

P1	=	13.13
P2 *	=	11.43

Junction Cone

α	=	16°58'3"
S	=	93.94
r1 min	=	
r2	=	

Collar

H1 *	=	8.59
H2 1)	=	8.59

Projectile

G1 1)	=	7.82
G2	=	
F	=	
L3+G 1)	=	81.67

Pressures (Energies)
Method Transducer

Pmax	=	3200	bar
PK	=	3680	bar
PE	=	4000	bar
M	=	25.00	
EE	=	3520	Joule

Miscellaneous Dimensions

Fe 1)4)	=	0.15
delta L	=	

CHAMBER MINI

Lengths

L1 *	=	55.65
L2 *	=	65.18
L3 1)	=	74.93

Breech

R 1)	=	1.55
R1	=	14.78
R2	=	
R3	=	
r	=	

Powder Chamber

E	=	
P1 1)	=	13.16
P2 *	=	11.46

Junction Cone

α	=	16°56'58"
S	=	94.11
r1 max	=	
r2	=	

Collar

H1 *	=	8.62
H2 1)	=	8.61

Commencement of Rifling

G1 1)*	=	7.89
G 1)*	=	6.99
α1	=	180°
h	=	
s	=	
i 1)	=	1°06'23"
w	=	

Barrel

F 1)*	=	7.62
Z 1)	=	7.82

Grooves

b	=	2.72	
N	=	6	
u	=	254.00	
Q	=	47.27	mm²

Dimensions in << mm >>
Dimensions and Tolerances for Proof Barrels
see Appendix CR 1.

Notes:
1) Check for safety reasons
4) Headspace on Rim
* Basic dimensions